**RoHS Compliant**

# APPROVAL SHEET

Issued No. :

| | | |
|---|---|---|
| **DESCRIPTION** | : | **SMD 3225 CRYSTAL** |
| **NOMINAL FREQ.** | : | **25.000000 MHz** |
| **TAITIEN P/N** | : | |
| **TAITIEN MODEL** | : | **XXACCLNANF-25.000000MHz** |
| **REVISION** | : | **1** |
| **DATE** | : | **12/21/2018** |

| QA | Checked | Prepared |
|---|---|---|
| | | |

| | | |
|---|---|---|
| **CUSTOMER** | : | **TACT** |
| **CUSTOMER P/N** | : | |

| Customer Signature |
|---|
| Approved: |
| Date: |

# REVISION HISTORY

| Rev. | Revised Page | Revision Content | Date | Ref. No. | Reviser |
|---|---|---|---|---|---|
| 01 | N/A | Initial Released | 12/19/2018 | N/A | Y.P.Ma |
| | | | | | |

Please note that placing order with Taitien constitutes acknowledgement that you have read and agree to Taitien's Terms and Conditions. Please refer to our website for more details. Thank you for choosing Taitien!
Remedies and Limitation of Liability: BUYER'S SOLE AND EXCLUSIVE REMEDY AND TAITIEN'S SOLE LIABILITY, WITH RESPECT TO ANY BREACH OF WARRANTY, SHALL BE AT TAITIEN'S OPTION: (A) REPAIR OR REPLACEMENT OF THE DEFECTIVE OR NONCONFORMING CRYSTALS OR (B) REFUND OF BUYER'S PURCHASE PRICE FOR THE DEFECTIVE OR NONCONFORMING CRYSTALS.
IN NO EVENT SHALL TAITIEN'S TOTAL LIABILITY FOR ANY AND ALL LOSSES AND DAMAGES ARISING OUT OF ANY CAUSE (INCLUDING, BUT NOT LIMITED TO, CONTRACT, NEGLIGENCE, STRICT LIABILITY OR OTHER TORT) EXCEED THE PURCHASE COST OF THE CRYSTALS. IN NO EVENT SHALL TAITIEN BE LIABLE FOR ANY INCIDENTAL, CONSEQUENTIAL OR PUNITIVE DAMAGES.

# CONTENT


| SPECIFICATIONS | PAGE |
|---|---|
| ELECTRICAL SPECIFICATIONS | 4~5 |
| RECOMMENDED IR REFLOW PROFILE | 6 |
| PRODUCT DIMENSIONS | 7 |
| PRODUCT IDENTIFICATION (MARKING) | 7 |
| PACKAGE INFORMATION | 8 |


# ATTACHMENT


| TESTING DATA | PAGE |
|---|---|
| ELECTRICAL CHARACTERISTICS TEST | 9 |
| OTHER DATA | |
| SUBSTANCE ANALYSIS LIST OF RAW MATERIAL | 10 |

## ■ ELECTRICAL SPECIFICATIONS

| | Parameter | Min. | Typ. | Max. | Units | Test Condition |
|---|---|---|---|---|---|---|
| 1-1 | Nominal Frequency | | 25.000000 | | MHz | |
| 1-2 | Frequency Tolerance. | -20 | | +20 | ppm | at 25℃+/-2℃ |
| 1-3 | Operating Temperature range | -40 | | +85 | °C | |
| 1-4 | Storage Temperature range | -55 | | +125 | °C | |
| 1-5 | Temperature Characteristics | -20 | | +20 | ppm | -40℃ to +85℃ |
| 1-6 | Nominal Load Capacitance | | 8 | | pF | |
| 1-7 | Series Resistance | | | 150 | Ω | |
| 1-8 | Shunt Capacitance | | | 3 | pF | |
| 1-9 | Motion Capacitance | | | | fF | |
| 1-10 | Motion Inductance | | | | mH | |
| 1-11 | Q factor | | | | K | |
| 1-12 | Spurious Response | | | | dB | |
| 1-13 | Frequency Pull ability | | | | ppm/pF | |
| 1-14 | C0/C1 Ratio | | | | | |
| 1-15 | Aging | -3 | | +3 | ppm/year | |
| 1-16 | Insulation Resistance | | 500MΩ Min. @ DC100V | | | |
| 1-17 | Nominal Drive Level | | 10 | | μW | into 15Ω |
| 1-18 | Dependency Condition | | | | μW | |
| 1-19 | Drive Level Dependency Resistance Max. Minus Min. | | | | Ω | |
| 1-20 | Drive Level Dependency Frequency Max. Minus Min. | | | | ppm | |
| 1-21 | Drive Level Dependency Resistance Max. | | | | Ω | |

## ■ CUSTOMER SPECIAL REQUIREMENT

| | |
|---|---|
| 2 | |

## ■ ENVIRONMENTAL

| | Parameter | Reference Std. | Test Condition |
|---|---|---|---|
| 3-1 | Vibration Test | MIL-STD-883 2007 Condition A<br>JESD22-B103 Condition 1 | 10~2000Hz, 1.52mm, 20g, each axis for 4 hrs |
| 3-2 | Thermal Shock | MIL-STD-883 1010 Condition B<br>JESD22-A104 Condition B | -55℃, 125℃; soak time is 10 mins, with total 200 cycles |
| 3-3 | Mechanical Shock | MIL-STD-883 2002 Condition B<br>JESD22-B104 Condition B | 1500G, half-sine, 0.5ms, each axis for 3 times. |

## ■ RECOMMENDED IR REFLOW PROFILE

➢ IR REFLOW PROFILE OF CERAMIC SMD PRODUCTS FOR Pb FREE PROCESS

**TAITIEN ELECTRONICS CO., LTD.**

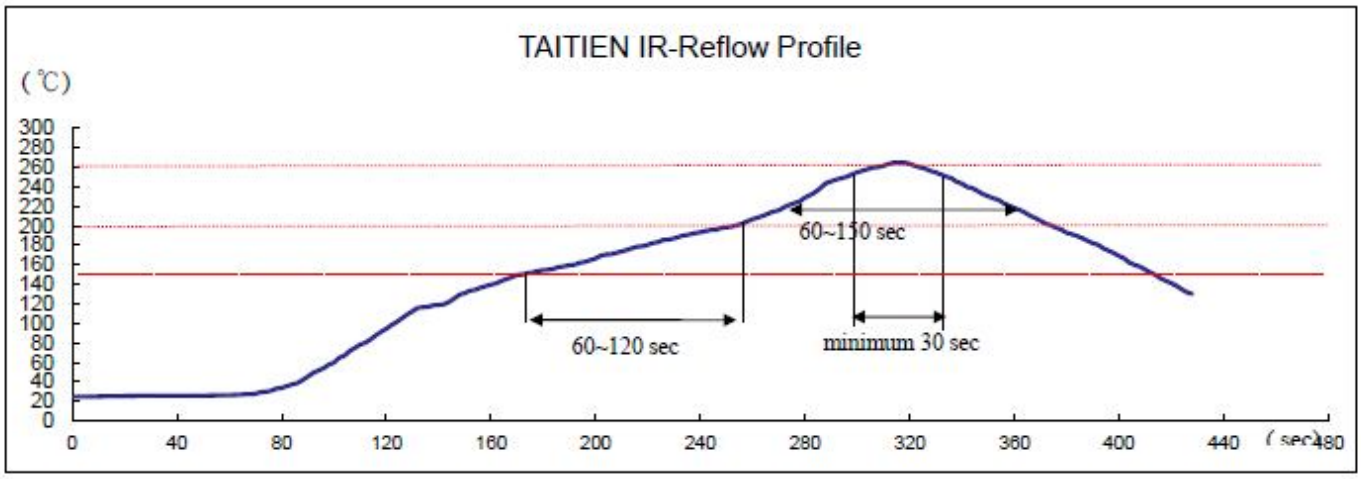


Reference Standard: JEDEC-STD 020
Test conditions: Pre-heating : 150℃ to 200℃, 60~120secs.
Heating : 217℃, 60~150sec.
Peak temperature at least : 260℃, The time above 255 ℃ : minimum 30sec.

## ■ PRODUCT DIMENSIONS

### ➢ DIMENSIONS

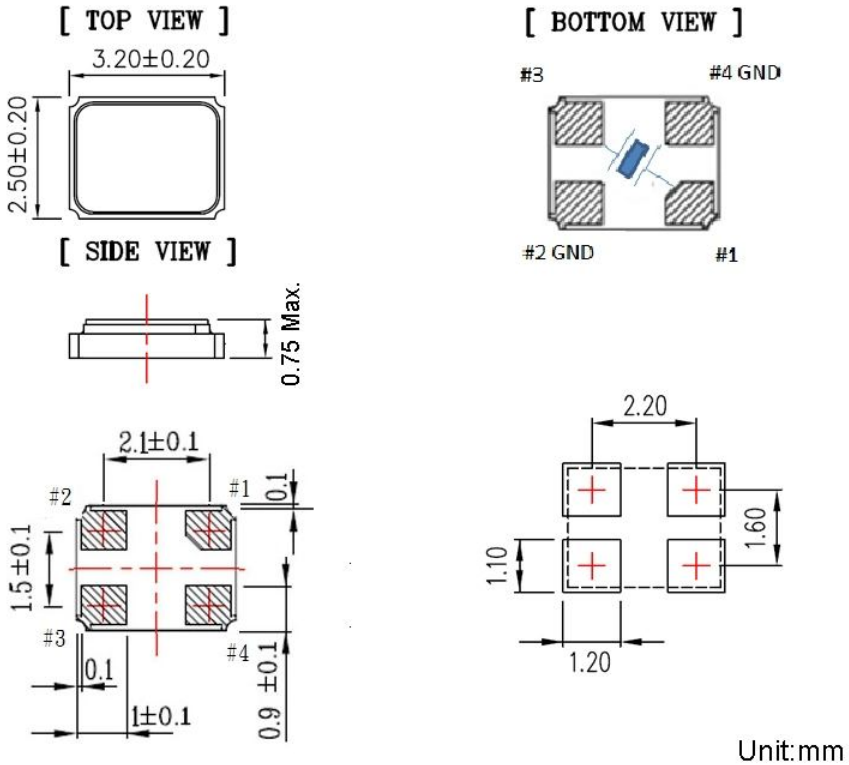


Unit:mm

## ■ PRODUCT IDENTIFICATION (MARKING)

### ➢ PROCEDURE: LASER

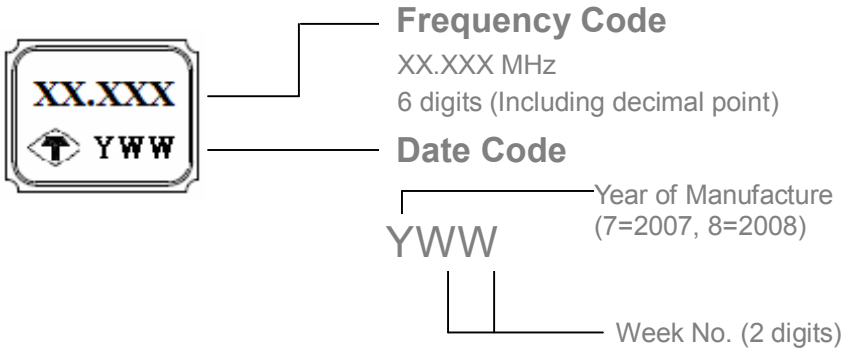


### ➢ FOR EXAMPLE:



## ■ PACKAGE INFORMATION

### ➢ TAPE (CARRIER) DIMENSIONS

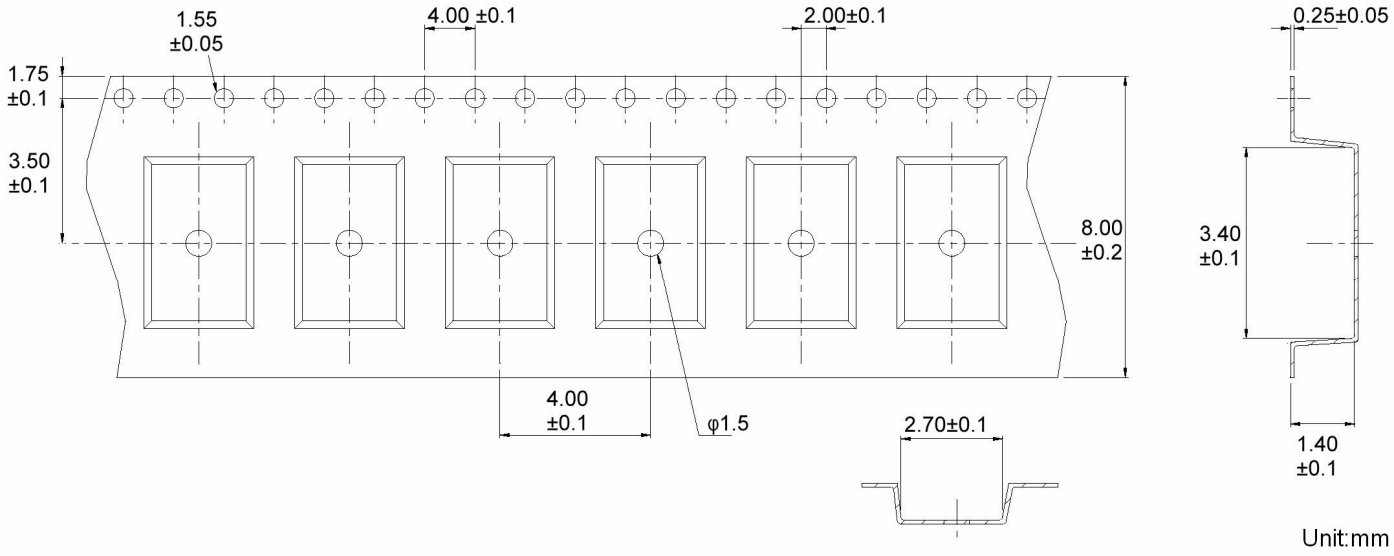


### ➢ THE DIRECTION OF PACKING

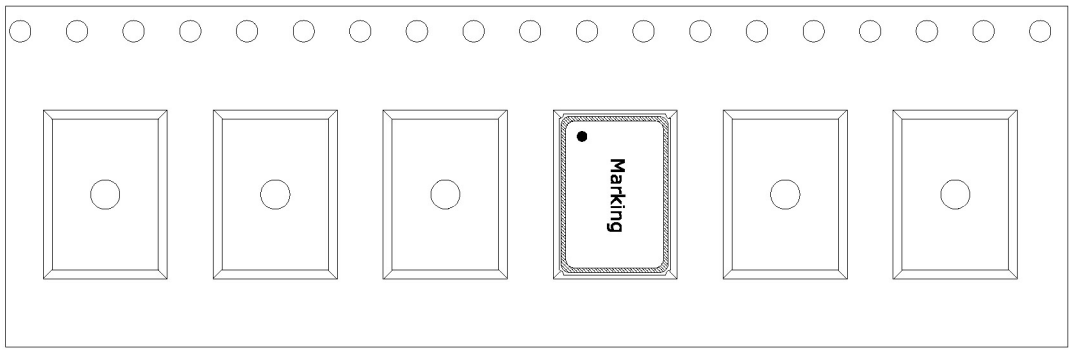


### ➢ REEL DIMENSIONS

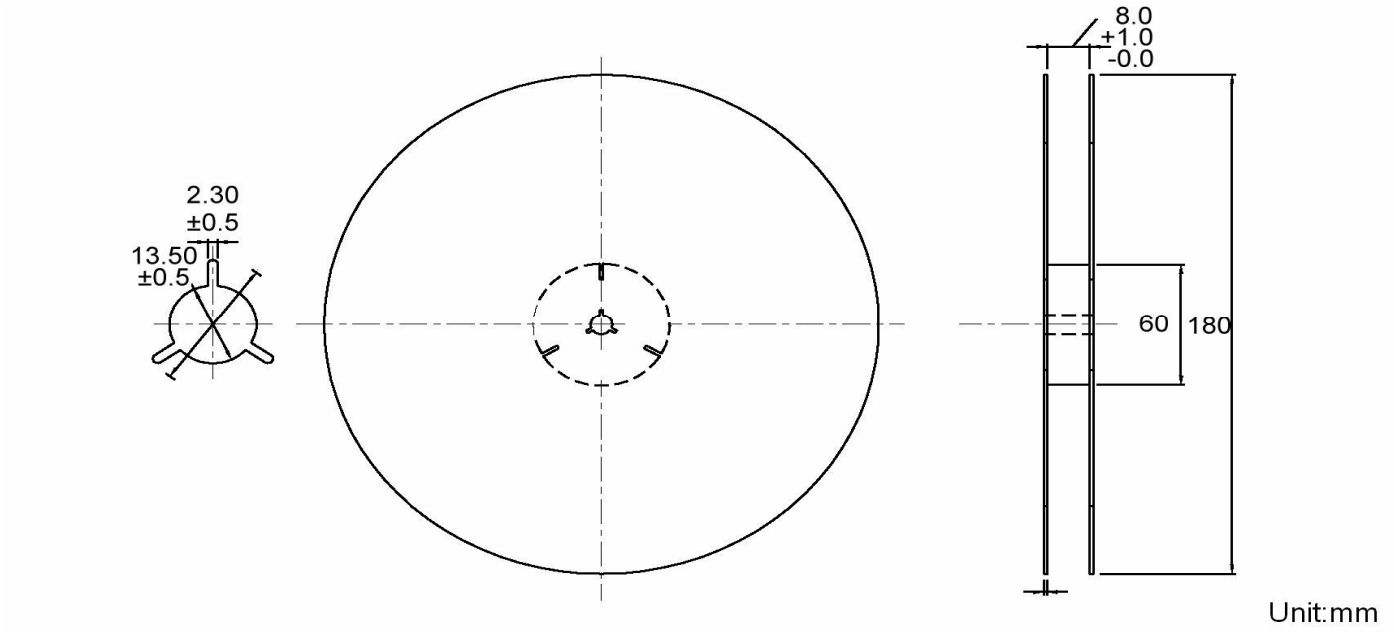

# ■ ATTACHMENT

## ➢ SUBSTANCE ANALYSIS LIST OF RAW MATERIAL

*TAITIEN ELECTRONICS CO., LTD.*

**TAITIEN ELECTRONICS (NANJING) CO.,LTD.**

**原材物料有害物質成分分解表(Hazardous Substance Analysis List of Raw Material)**

**型號(Model): XX type**

**重量(weight): 17.5 mg+/-20%**

| No. | Name of Part | Material Name | Material Mass(mg) | Constituent name | CAS No. | Material Mass(mg) | Material Analysis(%) | Supplier Name | 檢測机构 Test Institution | 檢測報告編號 Test report No. | 送檢日期 Test date | 有害有害物質成元素的含量（ppm） Hazardous substances content | | | | | | | | | | | | | 檢測報告 Inspection report |
|---|---|---|---|---|---|---|---|---|---|---|---|---|---|---|---|---|---|---|---|---|---|---|---|---|---|
| | | | | | | | | | | | | ROHS | | | | | | | | | | Halogen | | PFOS | PFOA | |
| | | | | | | | | | | | | Pb | Cd | Hg | Cr6+ | PBBs | PBDEs | DBP | BBP | DEHP | DIBP | Br | Cl | | | |
| 1 | BASE | Ceramic | 6.31 | $Al_2O_3$ | 1344-28-1 | 6.31 | 100 | 三瑞 | SGS | CANEC1801018701 | 2018/1/18 | ND | ND | ND | ND | ND | ND | ND | ND | ND | ND | ND | ND | ND | ND | |
| | | Metal | 3.93 | W | 7440-33-7 | 2.50 | 63.58 | | | | | | | | | | | | | | | | | | | |
| | | | | Ni | 7440-02-0 | 1.26 | 31.95 | | | | | | | | | | | | | | | | | | | |
| | | | | Au | 7440-57-5 | 0.18 | 4.47 | | | | | | | | | | | | | | | | | | | |
| | | KV ring | 2.56 | Fe | 7439-89-6 | 1.38 | 54 | | | | | | | | | | | | | | | | | | | |
| | | | | Ni | 7440-02-0 | 0.74 | 29 | | | | | | | | | | | | | | | | | | | |
| | | | | Co | 7440-48-4 | 0.44 | 17 | | | | | | | | | | | | | | | | | | | |
| 2 | LID | Kovar | 3.2 | Fe | 7439-89-6 | 1.73 | 54 | 銘陽晶實 | SGS | SHAEC1824378303 | 2018/11/7 | ND | ND | ND | ND | ND | ND | ND | ND | ND | ND | ND | ND | ND | ND | |
| | | | | Ni | 7440-02-0 | 0.93 | 29 | | | | | | | | | | | | | | | | | | | |
| | | | | Co | 7440-48-4 | 0.54 | 17 | | | | | | | | | | | | | | | | | | | |
| | | Plating | 0.3 | Ni | 7440-02-0 | 0.3 | 100 | | | SHAEC1823712303 | 2018/10/29 | ND | ND | ND | ND | NA | NA | NA | NA | NA | NA | NA | NA | NA | NA | |
| 3 | ADHESIVE | Silver paste | 0.6 | Ag | 7440-22-4 | 0.48 | 80 | THREE BOND | SGS | CE/2018/40773<br>CE/2018/40774<br>CE/2018/40776<br>CE/2018/24247 | 2018/4/16<br>2018/4/16<br>2018/4/16<br>2018/3/2 | ND | ND | ND | ND | ND | ND | ND | ND | ND | ND | ND | ND | ND | ND | |
| | | | | SIO2 | 14808-60-7 | 0.06 | 10 | | | | | | | | | | | | | | | | | | | |
| | | | | Silicone Resin | 63148-62-9 | 0.06 | 10 | | | | | | | | | | | | | | | | | | | |
| 4 | Blank | Quartz | 0.5 | $SiO_2$ | 14808-60-7 | 0.5 | 100 | TAITIEN(SZ) | SGS | CANEC1822930603<br>CANEC1822930602<br>CANEC1822930601 | 2018/11/14<br>2018/11/12<br>2018/11/12 | ND | ND | ND | ND | ND | ND | ND | ND | ND | ND | ND | ND | ND | ND | |
| 5 | Electrode | Cr | 0.01 | Cr | 7440-47-3 | 0.01 | 100 | SOLAR | SGS | SHAEC1817471001 | 2018/8/10 | ND | ND | ND | ND | ND | ND | ND | ND | ND | ND | ND | ND | ND | ND | |
| | | Ag | 0.09 | Ag | 7440-22-4 | 0.09 | 100 | | SGS | SHAEC1817083601 | 2018/8/6 | ND | ND | ND | ND | ND | ND | ND | ND | ND | ND | ND | ND | ND | ND | |
| | | | 17.50 | | | | | | | | | | | | | | | | | | | | | | QC0708-03FN-1.0 | |